Rev.	0628-718	Sh. 9	Next 10	1

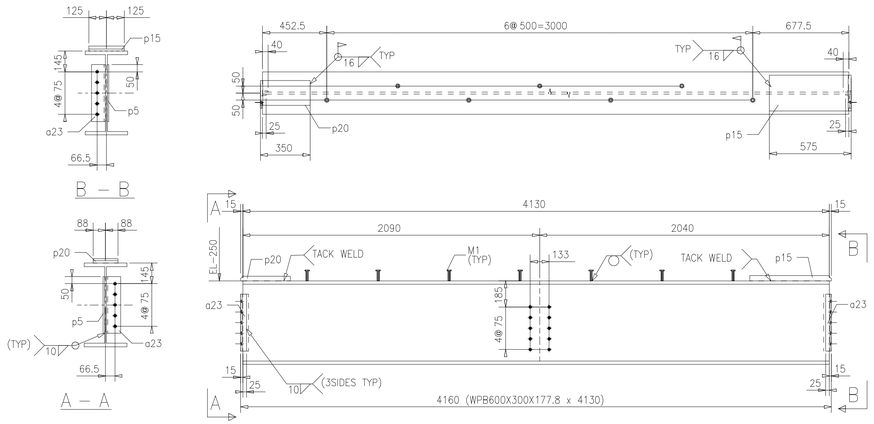

ONE NO BEAM REQD. AS DRAN. MKD. 9B1

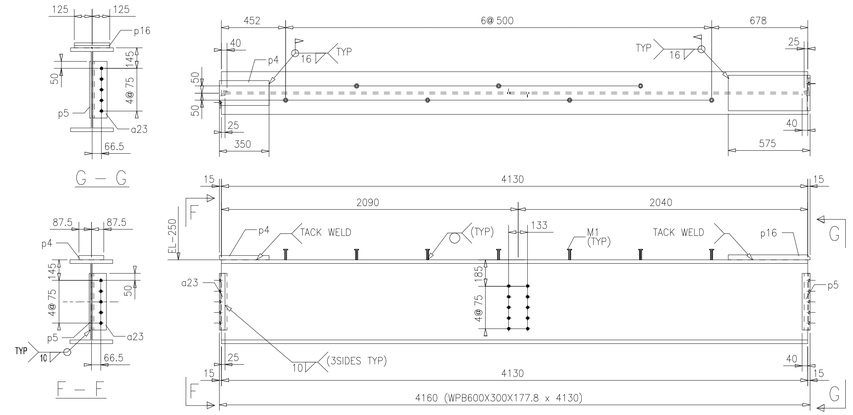

ONE NO BEAM REQD. AS DRAN. MKD. 9B4

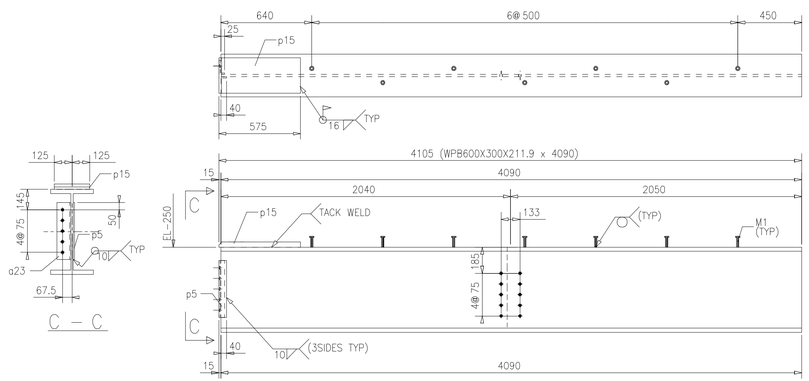

ONE NO BEAM REQD. AS DRAN. MKD. 9B2

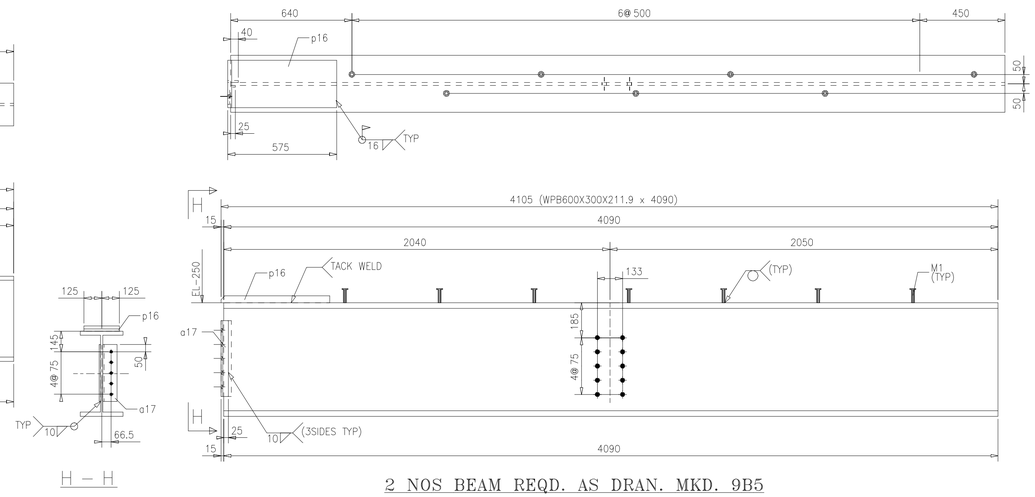

2 NOS BEAM REQD. AS DRAN. MKD. 9B5

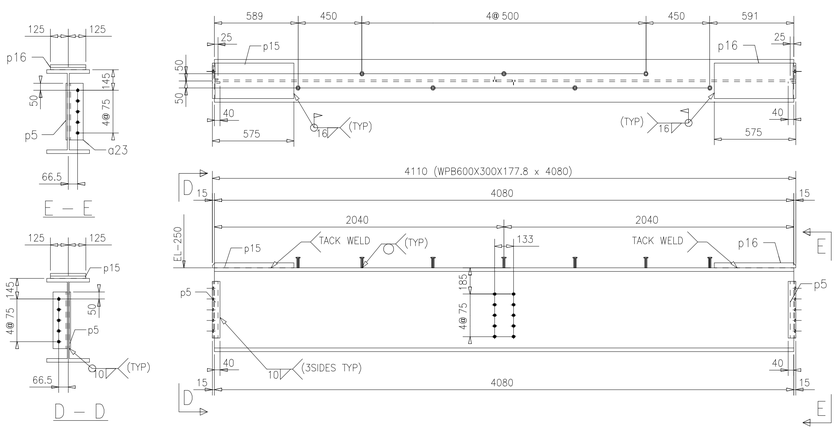

2 NOS BEAM REQD. AS DRAN. MKD. 9B3

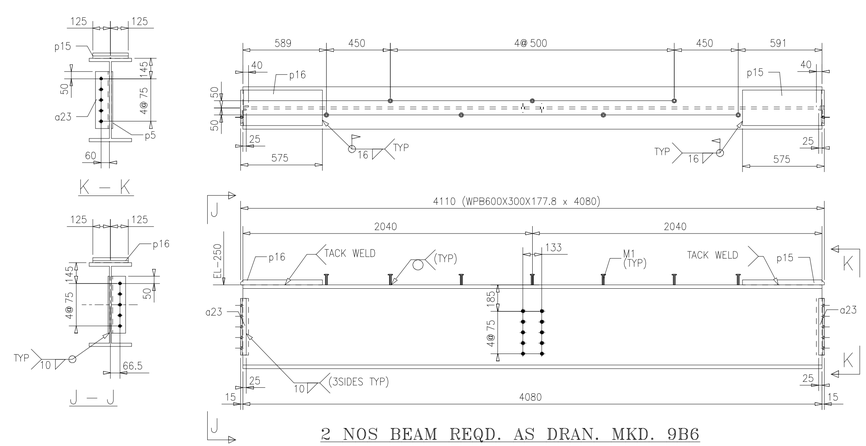

2 NOS BEAM REQD. AS DRAN. MKD. 9B6

BILL OF MATERIALS

ASSEMBLY MARK	ITEM NO.	MATL SPCN.	DESCRIPTION	LENGTH (in mm)	NO. OF NOS.	WEIGHT (in KG) UNIT WT.	TOTAL WT.	ASSEM. NOS.	WT. FOR ASSEM.	REMARKS
9B1							887.3	1	887.3	
	9B1	IS2062	WPB600X300X177.8	4130	1	733.7	733.7			
	M1	IS2062	STLD1-5-20A	75	3	0.1	1.0			
	a23	IS2062	DA10X8X40X12	400	2	7.1	14.1			
	p5	IS2062	PL172*95	400	2	2	4.1			
	p15	IS2062	PL150*250	575	1	40.2	40.2			
	p20	IS2062	PL172*195	350	1	15.2	15.2			
	WELD		16 @ I 4.6	0#	1#			0#		Size
9B2							917.2	1	917.2	
	9B2	IS2062	WPB600X300X211.9	4090	1	866.9	866.9			
	M1	IS2062	STLD1-5-20A	75	3	0.1	1.0			
	a23	IS2062	DA10X8X40X12	400	1	7.1	7.1			
	p5	IS2062	PL172*95	400	1	2	2			
	p15	IS2062	PL150*250	575	1	40.2	40.2			
	WELD		16 @ I 4.6	0#	5			5		Size
9B3						523.4		2	1046.8	
	9B3	IS2062	WPB600X300X177.8	4090	1	733.8	733.8			
	M1	IS2062	STLD1-5-20A	75	3	0.1	1.0			
	a23	IS2062	DA10X8X40X12	400	2	7.1	14.1			
	p5	IS2062	PL172*95	400	2	2	4.1			
	p15	IS2062	PL150*250	575	1	40.2	40.2			
	p16	IS2062	PL150*250	575	1	40.2	40.2			
	WELD		16 @ I 4.6	0#	1#			0#		Size
9B4						887.5		1	887.5	
	9B4	IS2062	WPB600X300X177.8	4130	1	733.7	733.7			
	M1	IS2062	STLD1-5-20A	75	3	0.1	1.0			
	a23	IS2062	DA10X8X40X12	400	2	7.1	14.1			
	p4	IS2062	PL172*195	350	1	15.4	15.4			
	p5	IS2062	PL172*95	400	2	2	4.1			
	p16	IS2062	PL150*250	575	1	40.2	40.2			
	WELD		16 @ I 4.6	0#	1#			0#		Size
9B5						917.2		2	1834.4	
	9B5	IS2062	WPB600X300X211.9	4090	1	866.9	866.9			
	M1	IS2062	STLD1-5-20A	75	3	0.1	1.0			
	a17	IS2062	DA10X8X40X12	400	1	7.1	7.1			
	p5	IS2062	PL172*95	400	1	2	2			
	p16	IS2062	PL150*250	575	1	40.2	40.2			
	WELD		16 @ I 4.6	0#	5			0#		Size
9B6						523.4		2	1046.8	
	9B6	IS2062	WPB600X300X177.8	4080	1	733.8	733.8			
	M1	IS2062	STLD1-5-20A	75	3	0.1	1.0			
	a23	IS2062	DA10X8X40X12	400	2	7.1	14.1			
	p5	IS2062	PL172*95	400	2	2	4.1			
	p15	IS2062	PL150*250	575	1	40.2	40.2			
	p16	IS2062	PL150*250	575	1	40.2	40.2			
	WELD		16 @ I 4.6	0#	1#			0#		Size
							GRAND TOTAL		7604.8	

© KORUS Engg. Solutions Pvt. Ltd.
This Drawing is the Property of KORUS Engg. Solutions Pvt. Ltd. and as such it should not be used in any way whatsoever without their permission in writing.
It is returnable on completion of the order for which it has been issued.

Cad Ref:- D:\C-2005\JSW-0628\718\0628-718s7R0y06

NOTES & SPECIAL NOTE REF. DRG. NO.7

Rev. No.	Date	Alteration	Design	Drawn	Chkd.	Appd.
1	17.09.07	GENERALLY REVISED				
0	12.09.07	RELEASED FOR CONSTRUCTION	A.K.T.	S.K.	A.K.A.	D.D.K.

1.0 MTPA BAR MILL, 0.6 MTPA WIRE ROD MILL & BILLET STORAGE BAY

ZONE-10 (ELECTRICAL CONTROL ROOM-2)
DETAIL OF BEAMS

Scale 1:20

Design	A.K.T.
Drawn	S.K.
Chkd.	A.K.A.
Appd.	D.D.K.
Date	31.08.07

Size A1 | Sh. 9 | Next 10 | 0628-718 | Rev. 1

KORUS Engg. Solutions Pvt. Ltd.

JSW STEEL LTD.
P.O. VIDYANAGAR - 583275
BELLARY-Dist., KARNATAKA.