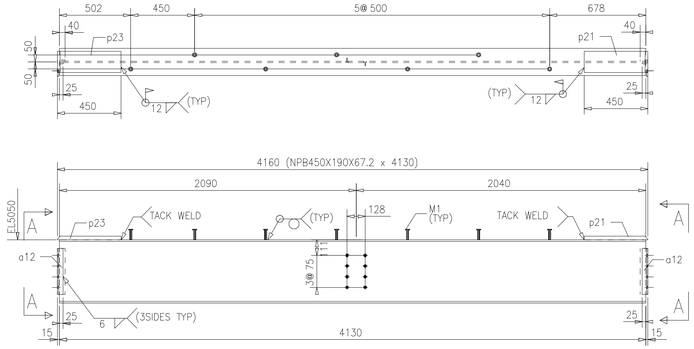

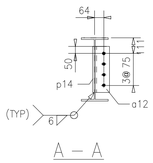

2 NOS. BEAM REQD. AS DRAN. MKD. 24B1

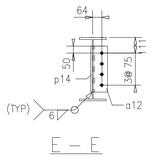

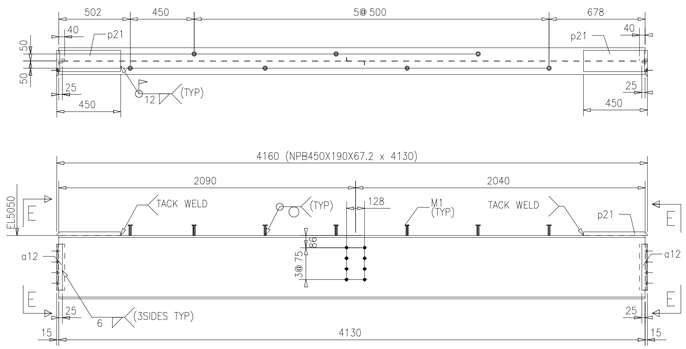

2 NOS. BEAM REQD. AS DRAN. MKD. 24B4

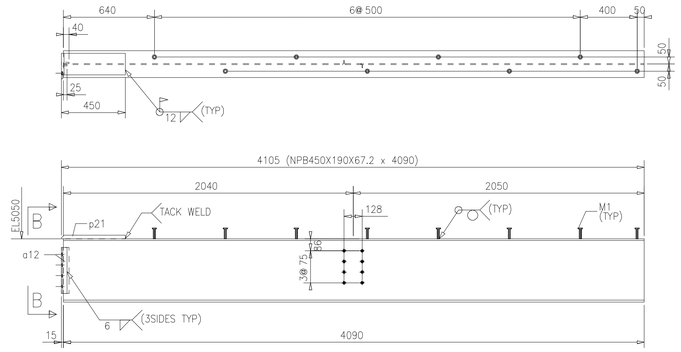

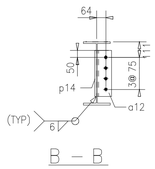

2 NOS. BEAM REQD. AS DRAN. MKD. 24B2

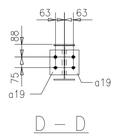

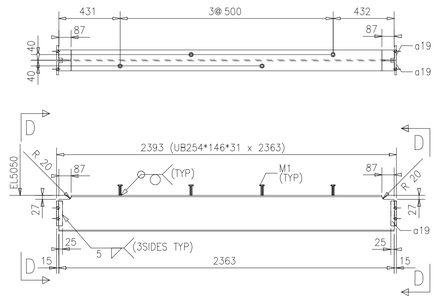

6 NOS. BEAM REQD. AS DRAN. MKD. 24B5

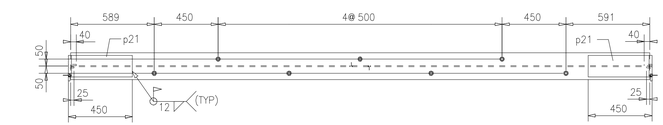

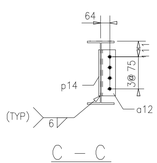

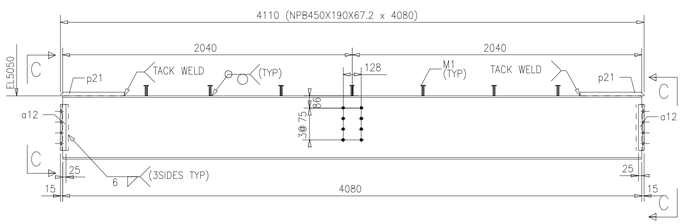

4 NOS. BEAM REQD. AS DRAN. MKD. 24B3

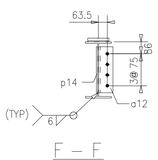

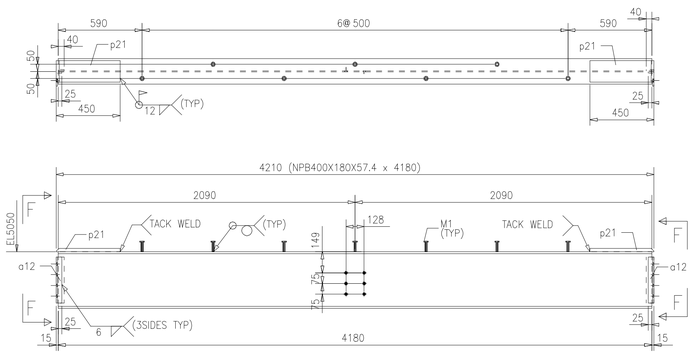

ONE NO. BEAM REQD. AS DRAN. MKD. 24B6

BILL OF MATERIALS

ERECTION MARK	ITEM NO.	MATL. SPCN	DESCRIPN	LENGTH (mm)	NO.OF NOS.	WEIGHT (kg) PC. WT.	TOTAL WT.	GROUP NOS.	WT. PER ASSEMBLY	REMARKS
24B1							318.8	2	637.6	
	24B1	IS2062	NPB450X190X67.2	4130	1	277.2	277.2			
	M1	IS2062	STFD-15-50-A	75	7	8.1	1.6			
	a12	IS2062	ISA130X65X8.2	125	2	5.6	11.2			
	p14	IS2062	PLT17*95	125	2	1.7	3.4			
	p23	43A	PLT25*190	485	1	13.6	13.6			
	p21	IS2062	PLT25*190	485	1	13.6	13.6			
	NOLT		16 Ø X 45	50	8			16		Size
24B2							290.9	2	581.8	
	24B2	IS2062	NPB450X190X67.2	4090	1	274.5	274.5			
	M1	IS2062	STFD-15-50-A	75	8	8.1	1.1			
	a12	IS2062	ISA130X65X8.2	125	1	5.6	5.6			
	p14	IS2062	PLT17*95	125	1	1.7	1.7			
	p23	43A	PLT25*190	485	1	13.6	13.6			
	NOLT		16 Ø X 45	50	4			8		Size
24B3							318.4	4	1274.6	
	24B3	IS2062	NPB450X190X67.2	4080	1	273.8	273.8			
	M1	IS2062	STFD-15-50-A	75	7	8.1	1.6			
	a12	IS2062	ISA130X65X8.2	125	2	5.6	11.2			
	p14	IS2062	PLT17*95	125	2	1.7	3.4			
	p23	43A	PLT25*190	485	2	13.6	26.0			
	NOLT		16 Ø X 45	50	8			32		Size
24B4							318.8	2	637.6	
	24B4	IS2062	NPB450X190X67.2	4130	1	277.2	277.2			
	M1	IS2062	STFD-15-50-A	75	7	8.1	1.6			
	a12	IS2062	ISA130X65X8.2	125	2	5.6	11.2			
	p14	IS2062	PLT17*95	125	2	1.7	3.4			
	p23	43A	PLT25*190	485	2	13.6	26.0			
	NOLT		16 Ø X 45	50	8			16		Size
24B5							87.0	6	522	
	24B5	IS2062	UB254*146*31	2363	1	74.0	74.0			
	M1	IS2062	STFD-15-50-A	75	4	8.1	0.5			
	a19	43A	ISA130X65X8.2	115	4	3.1	12.4			
	NOLT		16 Ø X 45	35	4			24		Size
24B6							280.5	1	280.5	
	24B6	IS2062	NPB400X180X57.4	4180	1	280.9	280.9			
	M1	IS2062	STFD-15-50-A	75	7	8.1	1.6			
	a12	IS2062	ISA130X65X8.2	125	2	5.6	11.2			
	p14	IS2062	PLT17*95	125	2	1.7	3.4			
	p23	43A	PLT25*190	485	2	13.6	26.0			
	NOLT		16 Ø X 45	50	8			8		Size
GRAND TOTAL							5932.1			

KORUS Engg. Solutions Pvt. Ltd.
This Drawing is the Property of KORUS Engg. Solutions Pvt. Ltd. and as such it should not be used in any way whatsoever without their permission in writing.
It is returnable on completion of the order for which it has been issued.

Cad Ref:- D\C-2005\JSW-0628\718\0628-718s7R0y06

NOTES & SPECIAL NOTE REF. DRG. NO.8

Rev. No.	Date	Alteration	Design	Drawn	Chkd.	Appd.
0	14.09.07	RELEASED FOR CONSTRUCTION	A.K.T.	S.K.	A.K.A.	D.D.K.

1.0 MTPA BAR MILL, 0.6 MTPA WIRE ROD MILL & BILLET STORAGE BAY

ZONE-10 (ELECTRICAL CONTROL ROOM-2)
DETAIL OF BEAMS

KORUS Engg. Solutions Pvt. Ltd.

Scale 1:20

Design	A.K.T.
Drawn	S.K.
Chkd.	A.K.A.
Appd.	D.D.K.
Date	31.08.07

Size A1 | 0628-718 | Rev. 0 | Sh. 24 | Next 25

JSW STEEL LTD.
P.O. VIDYANAGAR - 583275
BELLARY-Dist., KARNATAKA.