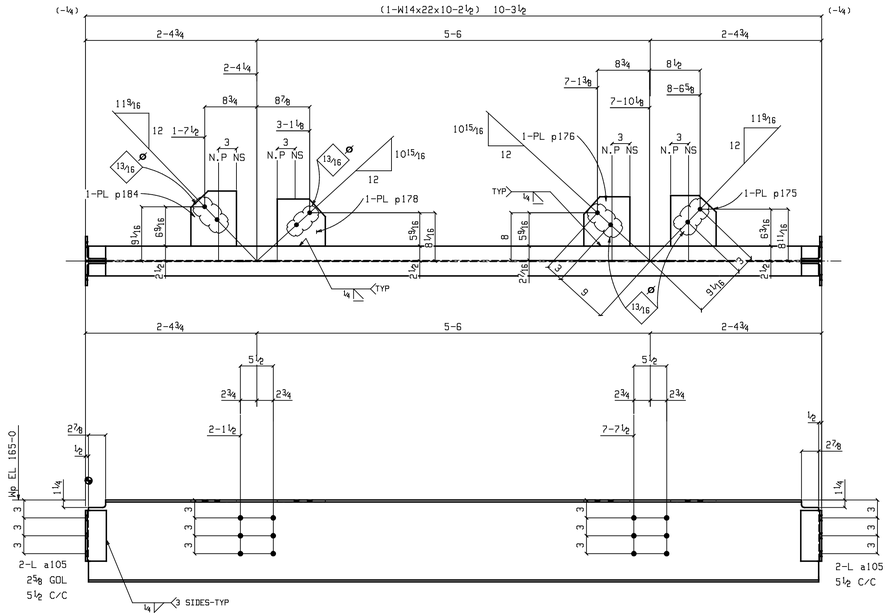

ONE BEAM 104B1

W 13¾x¼
F 5x9/16

T.O.GUSSET PLATE MATCHES T.O.S.OF BEAM (U.N.O.)

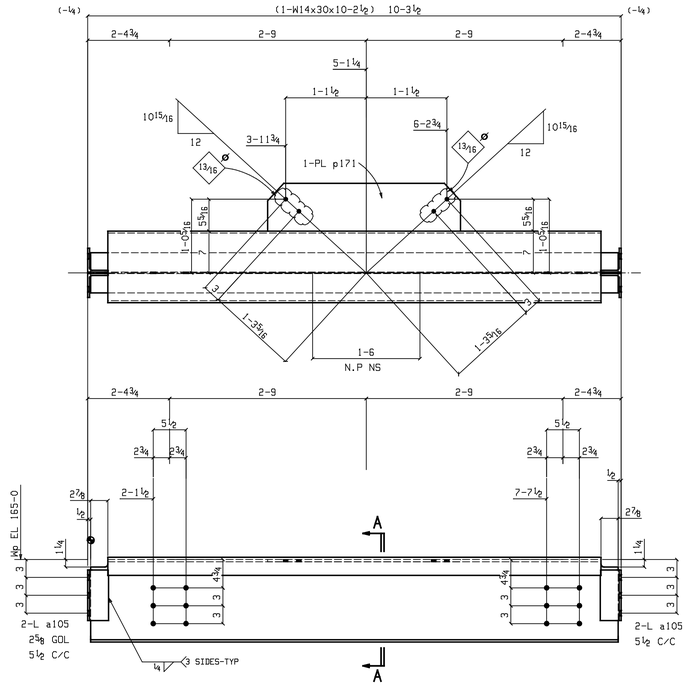

ONE BEAM 104B2

W 13 13/16x¼
F 6¾x⅜

T.O.GUSSET PLATE MATCHES T.O.S.OF BEAM (U.N.O.)

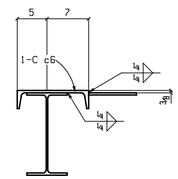

Section A-A
104B2

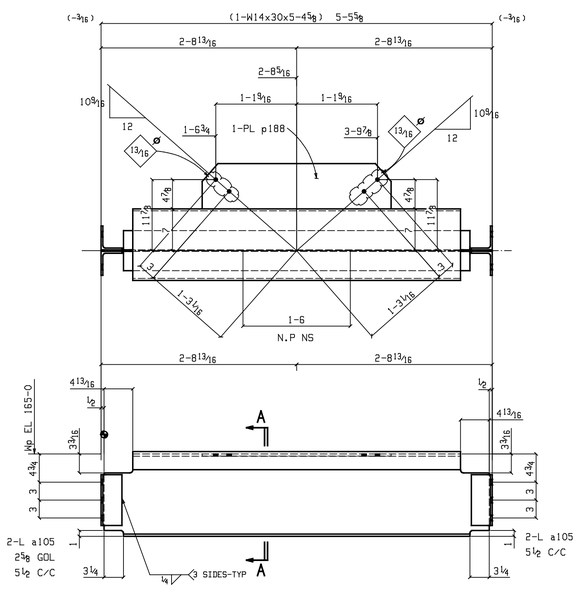

ONE BEAM 104B3

W 13 13/16x¼
F 6¾x⅜

T.O.GUSSET PLATE MATCHES T.O.S.OF BEAM (U.N.O.)

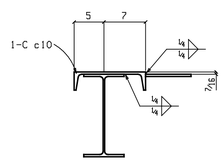

Section A-A
104B3

BILL OF MATERIAL

ABM	MARK	NO. OF PIECES	MATERIAL	LENGTH FT.	LENGTH IN.	REMARKS	WEIGHTS IN lbs
	104B1	ONE	BEAM				273
1-8	104B1	1	W14x22	10	2½	A992	225
4-5	a105	4	L4x3½x5/16	0	8½	A36	22
	p178	1	PL⅜x7⅞	0	8 1/16	A36	6
	p176	1	PL⅜x7¾	0	8¼	A36	6
	p184	1	PL⅜x7⅝	0	9¼	A36	7
	p175	1	PL⅜x7⅝	0	8½	A36	6
	104B2	ONE	BEAM				598
1-4	104B2	1	W14x30	10	2½	A992	306
4-5	a105	4	L4x3½x5/16	0	8½	A36	22
4-7	c6	1	C12x25	9	8¾	A36	243
	p171	1	PL⅜x8	2	8⅜	A36	27
	104B3	ONE	BEAM				323
	104B3	1	W14x30	5	4⅝	A992	162
	a105	4	L4x3½x5/16	0	8½	A36	22
	c10	1	C12x25	4	7	A36	115
	p188	1	PL⅜x7⅝	2	7 11/16	A36	25

NOTES :

1) ALL MATERIALS ARE-A992,GR.50 U.N.O.
2) REFERENCE DESIGN DWG.NO.- 41D747613
3) FOR ERECTION DRAWING REF. DWG. NO.- E101, E102

EXTENSION DIMENSIONS ARE TAKEN FROM ⊕ LINE.

PAINT SPECIFICATION
SURFACE PREP: SSPC-SP7 BRUSH BLAST.
SHOP PRIME: W/ RUST INHIBITIVE LEAD & CHROMATE FREE METAL PRIMER @ 2.0 TO 3.0 MILS DFT.
FINISH: W/ ALKYD INDUSTRIAL ENAMEL @ 2.0 TO 3.0 MILS DFT.

SEQ#1

REVISIONS				
0	06/20/06	YRK	RELEASED FOR FABRICATION	
A	06/20/06	YRK	ISSUED FOR APPROVAL	
△	DATE	BY	REVISION	

PRINTS ISSUED

NO.	DATE	USE	NO.	DATE	USE
		APPROVAL			FINAL APPROVAL
		DISTRIB.			
		SHOP			

JOB NAME
LOCATION
CONTRACTOR -
ARCHITECT
DESCRIPTION - FABRICATION DETAIL OF BEAM

DRAWN -YRK DATE 06/08/06 CHECKED -NTN DATE 06/08/06
FINISH -SEE SHOP NOTE
WELD -E70XX
HOLES -13/16 ● (U.N.O.)
CAD FILE: D104-0.dwg SCALE: 1" = 1'
Job No.
Dwg. No. D104