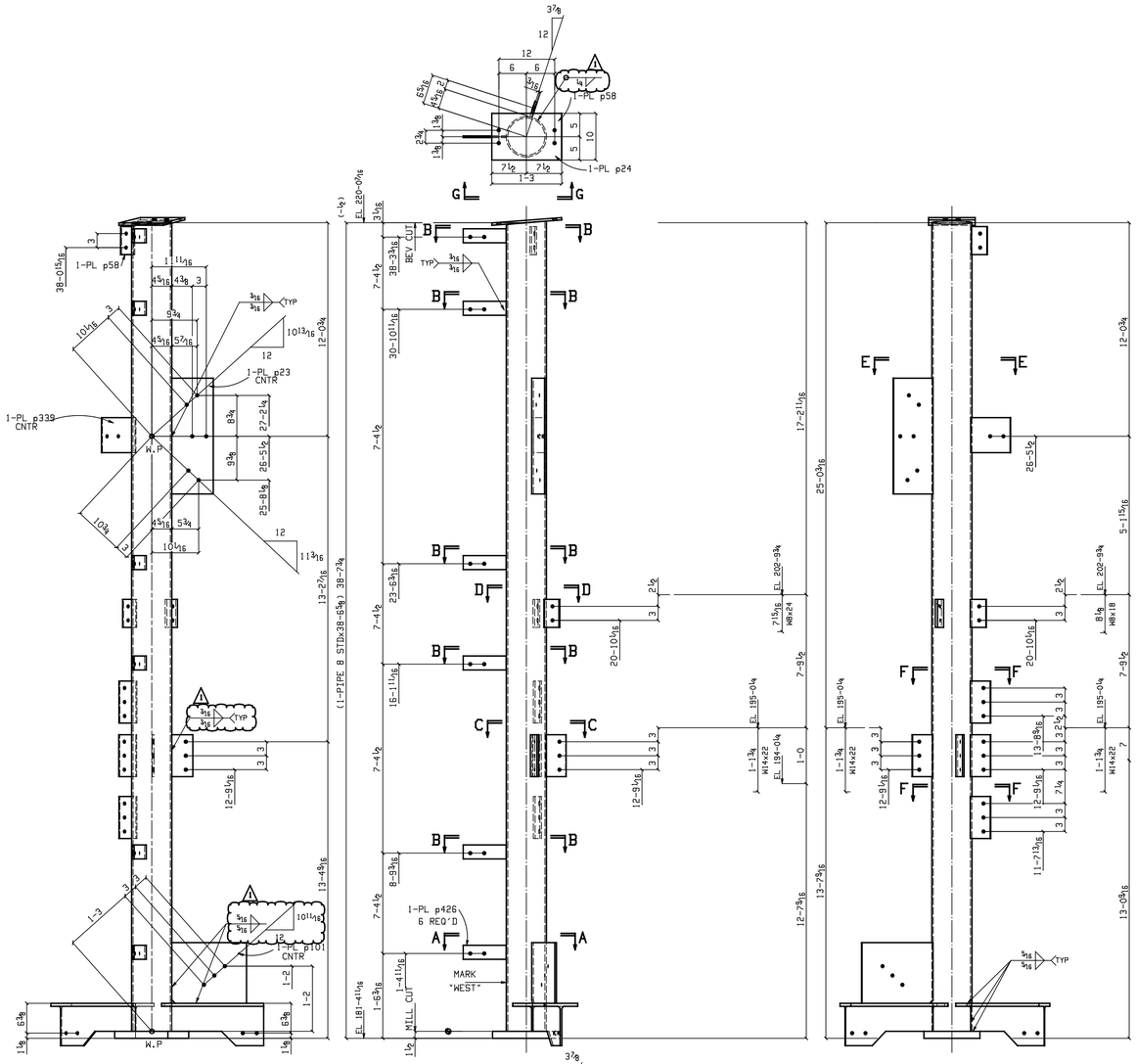

Section H-H
938C1

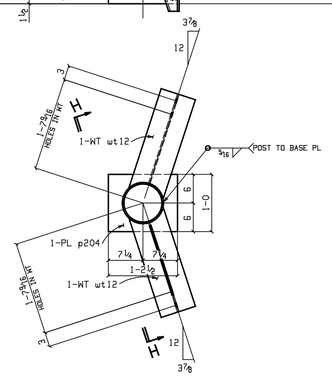

ONE COLUMN 938C1

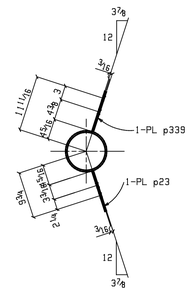

Section E-E
938C1

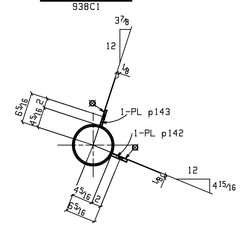

Section D-D
938C1

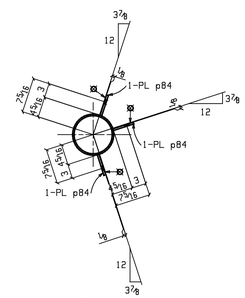

Section C-C
938C1

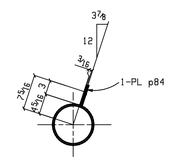

Section F-F
938C1

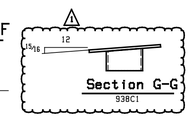

Section G-G
938C1

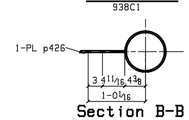

Section B-B
938C1

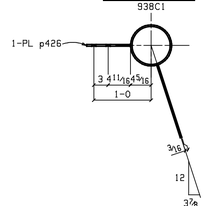

Section A-A
938C1

BILL OF MATERIAL

ABM	MARK	NO. OF PIECES	MATERIAL	LENGTH FT.	LENGTH IN.	REMARKS	WEIGHTS IN lbs
	938C1	ONE	COLUMN				1381
	938C1	1	PIPE 8 STD	38	6⅝	M1E B1E A53B	1101
	wt12	2	WT9x27.5	1	9 13/16	A992-50	86
	p204	1	PL1½x12	1	2½	A572-50	74
	p24	1	PL½x10	1	3	A36	21
	p142	1	PL½x3½	0	6	A36	3
	p101	1	PL⅜x13	1	4	A36	22
	p23	1	PL⅜x8⅞	2	0 13/16	A36	23
	p339	1	PL⅜x7½	0	8⅞	A36	7
	p84	5	PL⅜x4½	0	9	A36	22
	p58	1	PL⅜x3½	0	6	A36	2
	p143	1	PL⅜x3½	0	6	A36	2
	p426	6	PL⅜x3	0	9 3/16	A36	18

NOTES :

1) ALL MATERIALS ARE-A992,GR.50 U.N.O.
2) REFERENCE DESIGN DWG.NO.- 80394J
3) FOR ERECTION DRAWING REF. DWG. NO.- E901

EXTENSION DIMENSIONS ARE TAKEN FROM ⊕ LINE.

PAINT SPECIFICATION

STRUCTURAL STEEL APPENDIX A.5 TYPE 2 SYSTEM
SHOP PREP:- COMMERCIAL BLAST PER SSPC-SP6
SHOP PAINT:-
Prime with Carboline Carbozinc 11 Gray
Inorganic Zinc at 3.0 TO 4.0 MILS DFT.

SEQ#9

REVISIONS			
1	08/25/06	YRK	REVISED AS MARKED
0	08/22/06	YRK	ISSUED FOR FAB.
A	07/12/06	YRK	ISSUED FOR APPROVAL
△	DATE	BY	REVISION

PRINTS ISSUED NO.	DATE	USE	NO.	DATE	USE
		APPROVAL			FINAL APPROVAL
		DISTRIB.			
		SHOP			

CAD FILE: D0938

SCALE: 1" = 1'

JOB NAME
LOCATION
CONTRACTOR -
ARCHITECT
DESCRIPTION - FABRICATION DETAIL OF COLUMNS

DRAWN -YRK DATE 07/12/06 CHECKED -NTN DATE 07/12/06
FINISH -SEE SHOP NOTE
WELD -E70XX
HOLES -15/16 ● (U.N.O.)

Job No.
Dwg. No. D938