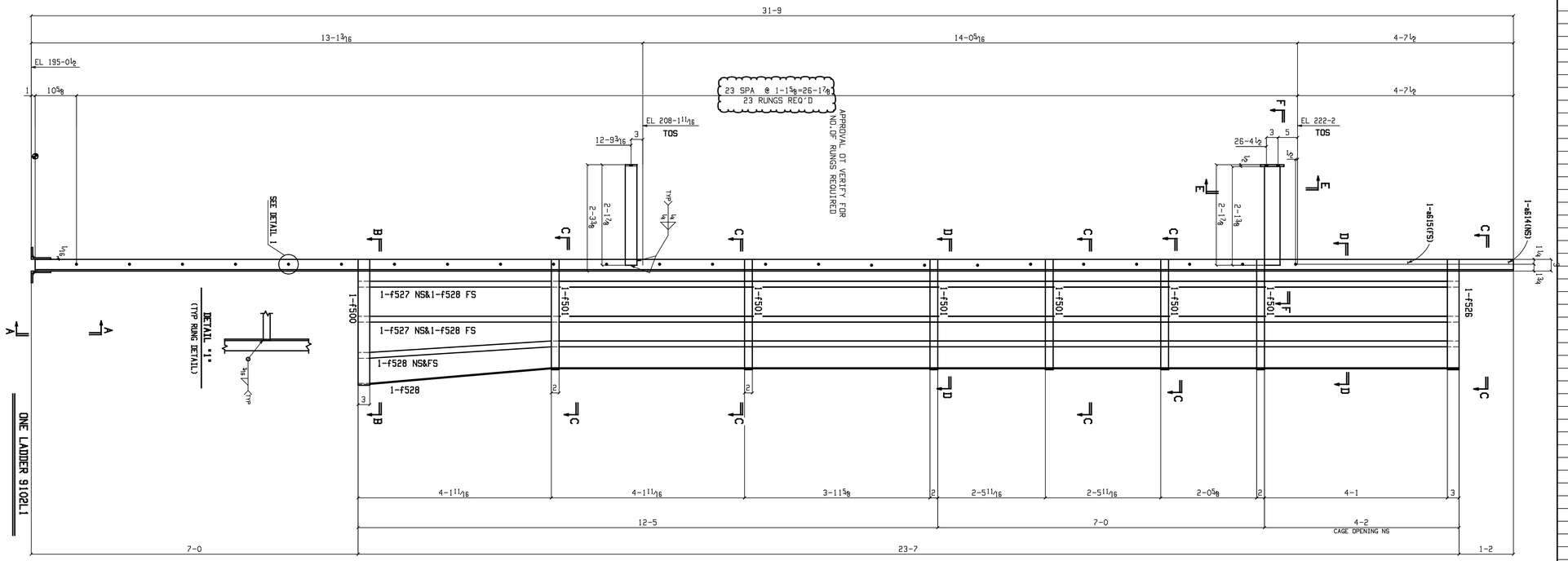

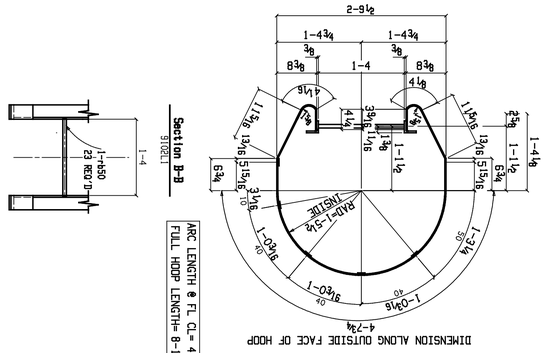

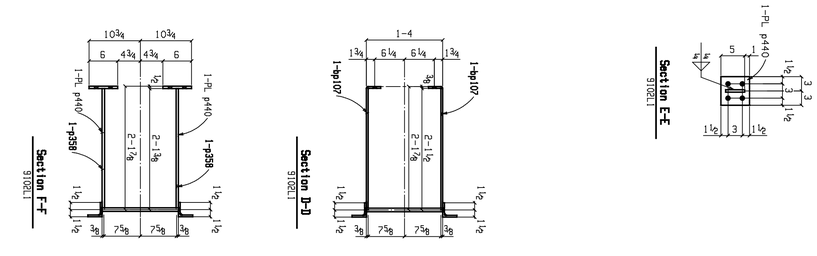

BILL OF MATERIAL

ABM	MARK	NO. OF PIECES	MATERIAL	LENGTH FT.	LENGTH IN.	REMARKS	WEIGHTS IN lbs
	9102L1	ONE	LADDER				877
	a614	1	L3x3x3/8	31	8	A36	228
	a615	1	L3x3x3/8	31	8	A36	228
	f650	2	FL3/8x2 1/2	0	2 1/2	A36	1
	f500	1	FL1/4x3	8	11 3/8	BENT A36	23
	f501	6	FL1/4x2	7	5 3/16	BENT A36	78
	f527	2	FL1/4x1 1/2	19	5	A36	50
	f528	5	FL1/4x1 1/2	23	7	A36	150
	p358	2	PL1/2x4	2	1 1/2	A36	28
	p440	2	PL3/8x6	0	6	A36	8
	a616	4	L5x3x3/8	0	3	A36	10
	bp105	2	FL1/2x3	2	4 7/8	BENT A36	25
	rb50	24	RB3/4	1	7 1/2		48

NOTES :

1) ALL MATERIALS ARE-A992,GR.50 U.N.O.
2) REFERENCE DESIGN DWG.NO.- 80395J, 396J, 402J
3) FOR ERECTION DRAWING REF. DWG. NO.- E905,E906,E907

EXTENSION DIMENSIONS ARE TAKEN FROM ⊕ LINE.

PAINT SPECIFICATION

SHOP PREP:- COMMERCIAL BLAST PER SSPC-SP6
PAINT SPEC:-GALVANIZED

SEQ#9

REVISIONS			
0	08/22/06	YRK	ISSUED FOR FAB.
B	08/18/06	YRK	GENERALLY REVISED & REISSUED FOR APPROVAL
A	07/24/06	YRK	ISSUED FOR APPROVAL
△	DATE	BY	REVISION

PRINTS ISSUED

NO.	DATE	USE	NO.	DATE	USE
		APPROVAL			FINAL APPROVAL
		DISTRIB.			
		SHOP			

JOB NAME
LOCATION
CONTRACTOR -
ARCHITECT
DESCRIPTION - FABRICATION DETAIL OF LADDER

DRAWN -YRK DATE 07/12/06 CHECKED -NTN DATE 07/12/06
FINISH -SEE SHOP NOTE
WELD -E70XX
HOLES -15/16 ● (U.N.O.)
SCALE: 1" = 1'
CAD FILE: D9101-A.dwg
Job No.
Dwg. No. D9102